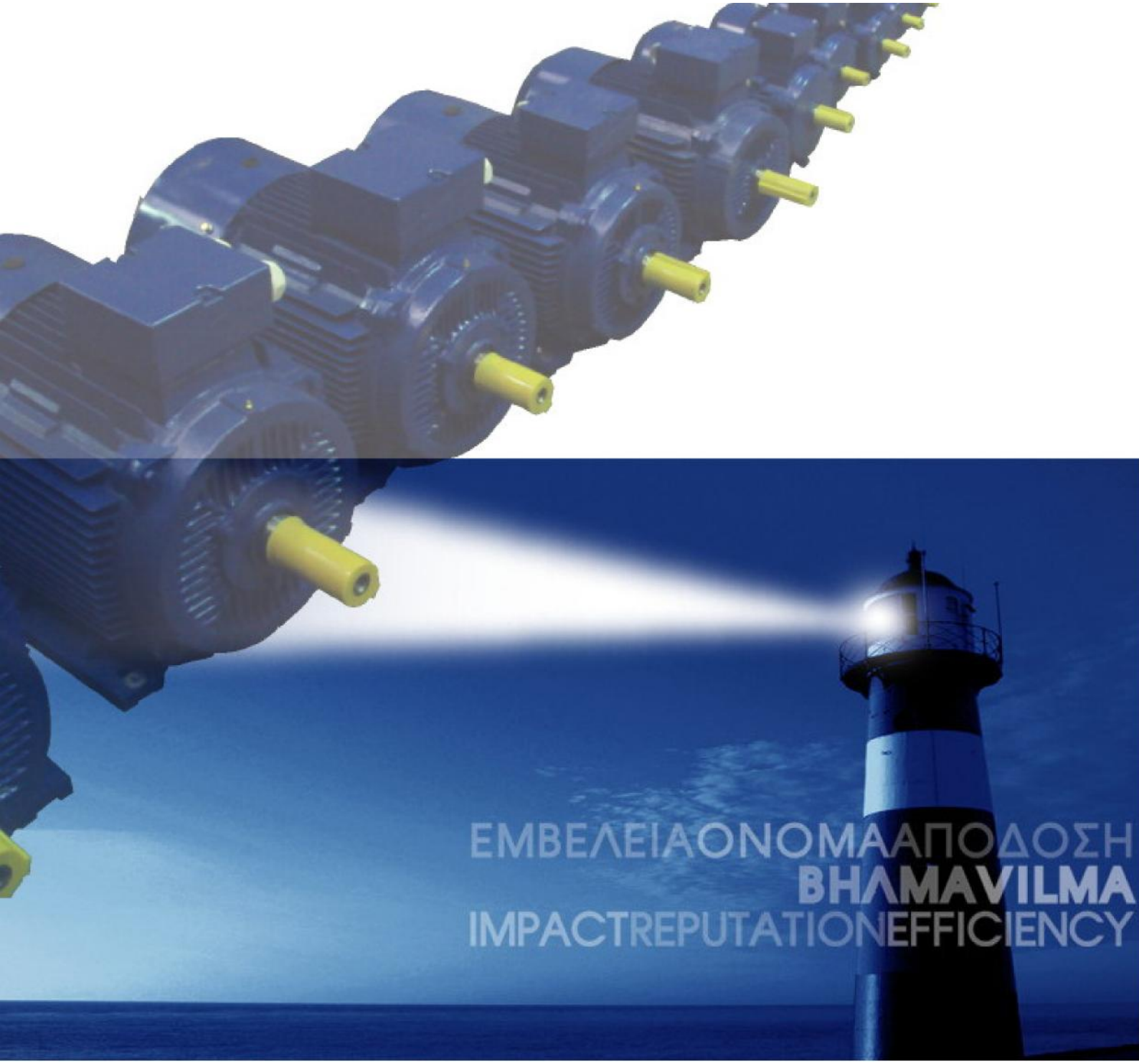

3M SERIES

Three Phase Squirrel Cage Induction Motors

IEC Low Voltage Asynchronous

VILMA MOTORS

3M SERIES

Three Phases Low Voltage Asynchronous Motors

3M Series

Vilma motors are designed and manufactured with high quality materials and workmanship in order to meet demanding and arduous operation conditions. 3M series can be applied for industrial, power plants, marine, shipyards, pumps & fan applications. With proper maintenance 3M series is designed for long life operation offering excellent value for money to the user.3M series complies with the updated , IEC , ENIEC standards

CE certified

3M series are certified with CE marking according to the updated norms for:

Low Voltage Directive
Electromagnetic Compatibility Directive
Machine Directive

Electric Motors nameplates are stamped with CE mark

ISO Certified.

3M series are manufactured according to the quality standard ISO 9001:2008.

General Specifications

Protection Enclosure
3M series are IP 55 standard

IP 56, IP65, IP66 can be provided Upon request

Cooling Method
3M series are IC 411 Standard

IC 416, IC 418 can be provided Upon request

Vibration Grade
3M series are N grade

R & S grade can be provided Upon request

Insulation Class F
Insulation class F allows a temperature rise of 105 K with maximum hot spot of 155 ˚C

Insulation Class H can be provided Upon request

Continuous Duty S1
Duty S1 is for continuous operation at a constant load for time in order motor to reach its thermal equilibrium

Nominal Voltage
380V, 400 V, 415 V /440 V

Nominal Frequency
50 Hz / 60 Hz

STANDARDS

TITLE	DIN/EN	IEC
DIRECTION ROTATION AND MARKING OF TERMINALS OF	DIN VDE 0530 / 8	IEC 60034 - 8
RATING PLATE MARKINGS	DIN EN 60034 -1	IEC 60034 - 1
DESIGNATION AND DIMENSIONS	EN 50347	IEC 60072
CLASSIFICATION OF TYPES OF ENCLOSURE	DIN EN 60034 -5	IEC 60034 – 5
CLASSIFICATION OF METHODS OF COOLING	DIN EN 60034 -6	IEC 60034 – 6
MOUNTING ARRANGEMENTS AND TYPES OF CONSTRUCTION	DIN EN 60034 -7	IEC 60034 – 7
DUTY AND RATING	DIN EN 60034 -1	IEC 60034 – 1
SERVICE AND OPERATING CONDITIONS	DIN EN 60034 -1	IEC 60034 - 1
LIMITS AND MEASUREMENT OF TEMPERATURE	DIN EN 60034 -1	IEC 60034 – 1
METHODS OF DETERMINE LOSSES AND EFFICIENCY	DIN EN 60034 - 2	IEC 60034 – 2
VIBRATION LIMITS	DIN EN 60034 - 14	IEC 60034 - 14
NOISE LEVEL LIMITS	DIN EN 60034 -9	IEC 60034 – 9
TESTS	DIN EN 60034 -1	IEC 60034 – 1
TOLERANCES	DIN EN 60034 -1	IEC 60034 – 1
IEC STANDARD VOLTAGES	DIN EN 60038	IEC 60038
STARTING PERFORMANCE	DIN EN 60034 -12	IEC 60034 – 12
BUILT – IN THERMAL PROTECTION	DIN EN 60034 -11	IEC 60034 – 11

MOUNTING ARRANGEMENTS

IEC 34-7, AS 1359-22, BS EN 60034-7. Assign designations to standard mounting arrangements for IEC electric motors, commonly known as the 'IM' code. A standard foot mounted motor which is mounted horizontally feet down is IM1001 or B3

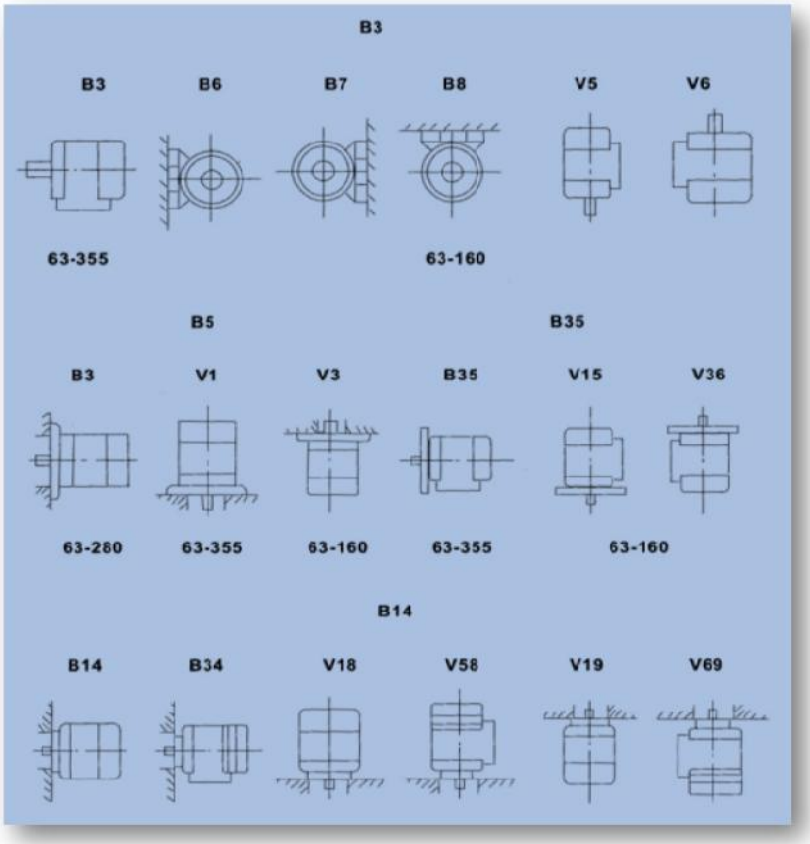

3M SERIES

Three Phases Low Voltage Asynchronous Motors

Tolerances

IEC 34-1, AS 1359-69. Specifies allowable tolerances for efficiency, power factor, speed, locked rotor torque, pull out torque, starting current and moment of inertia.

IEC 34-1 / EN 60034-1 & DIN VDE 0530 specify the following tolerances

Efficiency η	*Power Factor cosφ*	*Slip s*	*Locked Rotor current IA*	*Locked Rotor Torque MA*	*Breakdown Torque Mk*
- 0,15 (1-η) Pn <= 50 kW	*- (1 – cosφ)/ 6 min 0.02 max 0.07*	*+20% -20%*	*+20%*	*+25 % - 15 %*	*- 10%*
- 0,15 (1-η Pn >50 kW					

MOTORS COOLING

Acc IEC 60034 -6 IC (International Cooling) determines the cooling method	
IC ***	* (Circuit arrangement) * (Method of fluid circulation for the primary cooling fluid) * (Method of fluid circulation for the secondary cooling fluid)
IC 411 STANDARD	Self ventilated motor, enclosed machine. Externally finned. External shaft- mounted fan.
IC 416 ON REQUEST	Motor with assisted ventilation. Enclosed machine. Externally finned. Independent external fan mounted inside the fan cover.
IC 418 ON REQUEST	Motor with external ventilation. Enclosed machine. Externally finned. Ventilation provided by air flowing from the driven system

BUILD IN PROTECTION

PTC THERMISTOR VILMA MOTORS STANDARD	Pt 100	ANTICONDENSATION HEATER
PTC thermistors are temperature dependent resistors manufactured from barium titanate and should be chosen when a drastic change in resistance is required at a specific temperature or current level. PTCs can operate by temperature sensing, switching at temperature 155°C,	Pt 100 are used by temperature sensing and resistance recording in OHMS, the switching is succeed by control equipment.	Anticondesation heaters (winding D-end) are used to prevent motor after long term storage and power off where the environment has water condensations or when the temperature difference of the environment is continuous.

Motors can be provided with 1~ 230V or 3~ 400 V heaters

FRAMES	POWER (W)
up to 112	8
132	25
up to 180	50
up to 250	65
280	100
315S	130
315M	200
315L	200
355	300
400	400

3M BEARING SIZE

FRAME	POLES	DE	NDE	d	D	B
63	2 ,4	62012ZC3	62012ZC3	12	32	10
71	2,4	62012ZC3	62012ZC3	12	32	10
80	2,4,6,8	62022ZC3	62022ZC3	15	35	11
90	2,4,6,8	62042ZC3	62042ZC3	20	47	14
90	2,4,6,8	62052ZC3	62052ZC3	25	52	15
100	2,4,6,8	62062ZC3	62062ZC3	30	62	16
112	2,4,6,8	63062ZC3	63062ZC3	30	72	19
132	2,4,6,8	63082ZC3	63082ZC3	40	90	23
160	2,4,6,8	63092ZC3	63092ZC3	45	100	25
180	2,4,6,8	6311C3	6311C3	55	120	29
200	2,4,6,8	6312C3	6312C3	60	130	31
225	2,4,6,8	6313C3	6313C3	65	140	33
250	2,4,6,8	6314C3	6314C3	70	150	35
280	2	6314C3	6314C3	70	150	35
280	4,6,8	6317C3	6317C3	85	180	41
315	2	6317C3	6317C3	85	180	41
315	4,6,8,10	NU319C3	6319C3	95	200	45
355	2	6319C3	6319C3	95	200	45
355	4,6,8,10	NU322C3	6322C3	110	240	50

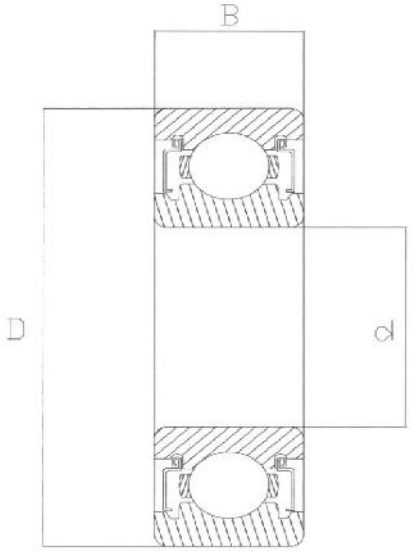

MOTORS PAINTING

TABLE IS APPLIED TO ALL TYPE OF VILMA ELECTRIC MOTORS		
PAINTING (PRIMER)	STANDARD F96833	PAINT FORMULATED WITH SOLID EPOXY RESINS MODIFIED WITH VINYL POLYAMIDE CATALYSERS
FINAL PAINTING	STANDARD	RAL 5010
FINAL PAINTING	ON REQUEST	ALL RAL colours

- For applications such as: marine, air mixed with salt, environment with acids, basic liquids, anhydride gases WE SUGGEST SPECIAL PAINTING as an example: epoxy vinyl followed by polyacrillic paint

- TROPICALISATION with insulated enamel in the internal of motor is already applied special tropicalisation can be applied on request

3M SERIES

Three Phases Low Voltage Asynchronous Motors

CONNECTIONS

DELTA

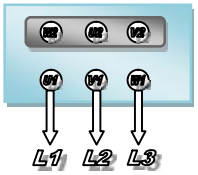

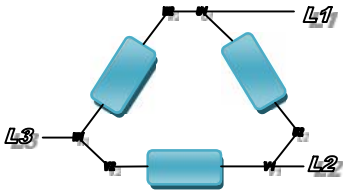

Direct On Line Starting
Direct insertion at the feeding line Staring Current & Starting Torque are given in the performance table in this catalogue

STAR

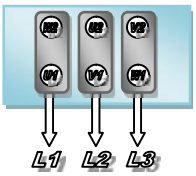

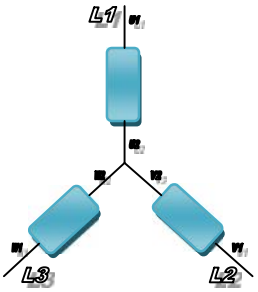

Star / Delta Starting
With Star / Delta starting the starting current is Low & the resistant torque very Low. Torque and Current with can be 27 to 30 % reduced in the starting phase from the values in the performance tables with a negligible transient at delta insertion

STAR - DELTA

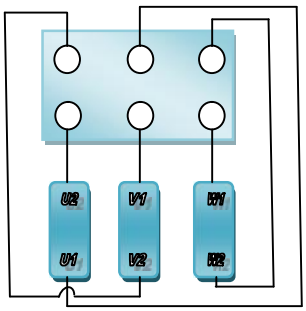

Soft Starter Starting
With Soft Starters abrupt insertion is avoided, the starting current is limited, because the devise supplies voltage gradually. The starting current depends directly of the resistant torque of the coupled torque value, the inertia & pre-set starting times. When starting with low loads device devise saves energy

VIBRATION LIMITS

Vibration limits: EN 60034-14 specifies limits of vibration severity

SERIES 3M.3HS & AMV MOTORS are dynamically balanced with half keys fitted also according to DIN ISO 8821

LIMITS OF VIBRATION SEVERITY IN mm / sec

TOLERANCES OF DEVIATION + / - 10 %

VIBRATION CLASS	RATED SPEED	FRAME < / =132	132 < FRAME < / =225	225 < FRAME < / = 400	FRAME > 400
N	600 ~ 3600	1.8	2.8	3.5	3.5
R	600 ~ 1800	0.71	1.12	1.8	2.8
	>1800 ~ 3600	1.12	1.8	2.8	2.8
S	600 ~ 3600	0.45	0.71	1.12	
	>1800 ~ 3600	0.71	1.12	1.8	

Degrees of protection

Classification of Types of Enclosure. IEC 34 -5. AS 1359 -4: This standard specifies the degree of protection for electrical equipment, commonly known as the ' IP ' code.

. ***IEC 34 -5 / EN 60034 -5 specify the degrees of protection of electrical equipment Known as the "IP" code.***

TABLE OBEYS ALSO TO EN 60259 & DIN VDE 0470 PART

FIRST DIGIT			SECOND DIGIT – PROTECTION AGAINST WATER		
			IP*4	**IP *5**	**IP *6**
			PROTECTION AGAINST SPLASHING WATER FROM ANY DIRECTION	PROTECTION AGAINST JETS FROM ANY DIRECTION	WATER PROJECTED IN POWER JETS SHALL HAVE NO HARMFUL EFFECTS
IP 5*	PROTECTION AGAINST TOUCHING WITH TOOLS, WIRE, ETC., > 1 mm Φ	PROTECTION AGAINST INTERNAL DUST ACCUMULATION	**IP54**	**IP55**	**IP56**
IP 6*	PROTECTION AGAINST TOUCHING WITH TOOLS, WIRE, ETC., > 1 mm Φ	PROTECTION AGAINST ALL DUST PENETRATION		**IP66**	**IP66**

3M SERIES

Three Phases Low Voltage Asynchronous Motors

PERFOMANCE TABLE FOR 3M SERIES 3000 R.P.M. / 2 POLES

FRAME SIZE	Pn kW	VOLTAGE 380 I (A)	VOLTAGE 400 I (A)	VOLTAGE 415 I (A)	Speed RPM	Eff %	P.F. COSΦ	LRT ------ RLT	LRA ------ RLA	BDT ------ RLT	Noise LwdB(A)	W kg	J Kgm2
63 M1	**0.18**	0.53	0.50	0.48	2720	65.0	0.80	2.3	5.5	2.2	50	14	.00031
63 M2	**0.25**	0.69	0.68	0.65	2720	68.0	0.81	2.3	5.5	2.2	50	14.5	.00041
71 M1	**0.37**	1.01	1.00	0.96	2755	69.0	0.81	2.3	6.1	2.2	53	15	.00048
80 M1	**0.55**	1.38	1.29	1.24	2790	74.0	0.82	2.3	6.1	2.3	53	15.5	.00060
80 M1	**0.75**	1.77	1.74	1.68	2845	75.0	0.83	2.2	6.1	2.3	61	16.5	.00075
80 M2	**1.1**	2.61	2.48	2.39	2835	76.2	0.84	2.2	6.9	2.3	61	17.5	.00090
90 S	**1.5**	3.46	3.28	3.16	2850	78.5	0.84	2.2	7.0	2.3	63	21	.00120
90 L	**2.2**	4.85	4.61	4.45	2855	81.0	0.85	2.2	7.0	2.3	63	25	.00140
100 L	**3**	6.34	6.03	5.81	2860	82.6	0.87	2.2	7.5	2.3	64	33	.00290
112 M	**4**	8.2	7.79	7.51	2860	84.2	0.88	2.2	7.5	2.3	70	41	.00550
132 S1	**5.5**	11.1	10.53	10.15	2900	85.7	0.88	2.2	7.5	2.3	70	63	.01090
132 S2	**7.5**	14.9	14.1	13.6	2900	87.0	0.88	2.2	7.5	2.3	70	70	.01260
160 M1	**11**	21.2	20.2	19.5	2930	88.4	0.89	2.2	7.5	2.3	76	110	.03770
160 M2	**15**	28.6	27.2	26.2	2930	89.4	0.89	2.2	7.5	2.3	76	120	.04990
160 L	**18.5**	34.7	33.0	31.8	2930	90.0	0.90	2.2	7.5	2.3	76	135	.05500
180 M	**22**	41	39.0	37.6	2940	90.5	0.90	2.0	7.5	2.3	79	165	.07500
200 L1	**30**	55.4	52.6	50.7	2950	91.4	0.90	2.0	7.5	2.3	81	218	.12400
200 L2	**37**	67.9	64.5	62.2	2950	92.0	0.90	2.0	7.5	2.3	82	230	.13900
225 M	**45**	82.1	78.0	75.2	2960	92.5	0.90	2.0	7.5	2.3	82	280	.23300
250 M	**55**	100	94.8	91.4	2970	93.0	0.90	2.0	7.5	2.3	84	365	.31200
280 S	**75**	135	129	124	2975	93.6	0.90	2.0	7.0	2.3	87	495	.57900
280 M	**90**	160	152	147	2975	93.9	0.91	2.0	7.1	2.	88	565	.67500
315 S	**110**	195	186	179	2975	94.0	0.91	1.8	7.1	2.2	87	890	1.1800
315 M	**132**	233	222	214	2975	94.5	0.91	1.8	7.1	2.2	87	980	1.8200
315 L1	**160**	279	265	256	2975	94.6	0.92	1.8	7.1	2.2	88	1055	2.0800
315 L2	**200**	348	331	319	2975	94.8	0.92	1.8	7.1	2.2	89	1100	2.3800
355 M	**250**	433	412	397	2980	95.2	0.92	1.8	7.1	2.2	90	1800	3.0000
355 L	**315**	545	518	499	2980	95.4	0.92	1.8	7.1	2.2	90	2300	3.5000

Duty Type : (S1)
Insulation Class : F
Prtection Class : IP55
Cooling Method : IC 411

Rated Voltage : 400 V / 440 V
Rated Frequency : 50 Hz / 60 Hz
Ambient Temperature : -15 ºC ~ 40 ºC
Standard : ENIEC 60034-1

LRT/RLT : DOL Starting torque ratio
LRA/RLA : DOL Starting current ratio
BDT/RLT : DOL Starting pull out torque ratio

PERFOMANCE TABLE FOR 3M SERIES 1500 R.P.M. / 4 POLES

FRAME SIZE	Pn kW	VOLTAGE 380 I (A)	VOLTAGE 400 I (A)	VOLTAGE 415 I (A)	Speed RPM	Eff %	P.F. COSΦ	LRT ------ RLT	LRA ------ RLA	BDT ------ RLT	Noise LwdB(A)	W kg	J Kgm2
63 M1	**0.18**	0.64	0.60	0.58	1310	60	0.73	2.1	4.4	2.2	42	14	.000310
71 M1	**0.25**	0.79	0.75	0.72	1345	65	0.74	2.1	5.2	2.2	44	14.5	.000420
71 M2	**0.37**	1.12	1.06	1.01	1340	67	0.75	2.1	5.2	2.2	44	15	.000800
80 M1	**0.55**	1.57	1.49	1.44	1390	71	0.75	2.4	5.2	2.3	47	15.5	.001810
80 M2	**0.75**	2.05	1.95	1.88	1380	73	0.76	2.3	6.0	2.3	47	16.5	.002100
90 S	**1.1**	2.85	2.71	2.61	1390	76.2	0.77	2.3	6.0	2.3	57	17.5	.002300
90 L	**1.5**	3.72	3.54	3.41	1400	78.5	0.78	2.3	6.0	2.3	62	21	.002700
100 L1	**2.2**	5.09	4.90	4.72	1410	80	0.81	2.3	7.0	2.3	62	25	.005400
100 L2	**3**	6.78	6.39	6.16	1410	82.6	0.82	2.3	7.0	2.3	66	33	.006700
112 M	**4**	8.8	8.36	8.06	1435	84.2	0.82	2.3	7.0	2.3	67	41	.009500
132 S	**5.5**	11.7	11.2	10.8	1440	85.7	0.83	2.3	7.0	2.3	70	63	.02140
132 M	**7.5**	15.6	14.8	14.3	1450	87	0.84	2.3	7.0	2.3	70	70	.02960
160 M	**11**	22.5	21.4	20.6	1460	88.4	0.84	2.2	7.0	2.3	76	110	.07470
160 L	**15**	30	28.5	27.5	1460	89.4	0.85	2.2	7.5	2.3	76	120	.09180
180 M	**18.5**	36.3	34.5	33.3	1470	90	0.86	2.2	7.5	2.3	76	135	.13900
180 L	**22**	43.2	40.8	39.3	1470	90.5	0.86	2.2	7.5	2.3	79	165	.15800
200 L	**30**	57.6	55.1	53.1	1470	91.4	0.86	2.2	7.2	2.3	81	218	.26200
225 S	**37**	70.2	66.7	64.3	1475	92	0.86	2.2	7.2	2.3	81	230	.40600
225 M	**45**	84.9	80.7	77.8	1475	92.5	0.87	2.2	7.2	2.3	81	280	.46900
250 M	**55**	103	98.1	94.6	1480	93	0.87	2.2	7.2	2.3	82	365	.66000
280 S	**75**	138.3	131	127	1480	93.6	0.87	2.2	6.8	2.3	83	495	1.12000
280 M	**90**	165	157	152	1480	93.9	0.88	2.2	6.8	2.3	84	565	1.64000
315 S	**110**	201	191	184	1480	94.5	0.88	2.1	6.9	2.2	86	890	3.10000
315 M	**132**	240	228	220	1480	94.8	0.88	2.1	6.9	2.2	86	980	3.62000
315 L1	**160**	288	273	264	1480	94.9	0.88	2.1	6.9	2.2	87	1055	4.13000
315 L2	**200**	360	342	329	1480	94.9	0.88	2.1	6.9	2.2	87	1100	4.73000
355 M	**250**	443	421	406	1490	95.2	0.90	2.1	6.9	2.2	90	1900	6.50000
355 L	**315**	559	531	511	1490	95.2	0.90	2.1	6.9	2.2	90	2000	8.20000
355 L1	**355**	653	620	598	1485	95.1	0.87	1.8	6.9	2.0	90	2200	9.50000

Duty Type : (S1)
Insulation Class : F
Prtection Class : IP55
Cooling Method : IC 411

Rated Voltage : 400 V / 440 V
Rated Frequency : 50 Hz / 60 Hz
Ambient Temperature : -15 ºC ~ 40 ºC
Standard : ENIEC 60034-1

LRT/RLT : DOL Starting torque ratio
LRA/RLA : DOL Starting current ratio
BDT/RLT : DOL Starting pull out torque ratio

3M SERIES

Three Phases Low Voltage Asynchronous Motors

PERFOMANCE TABLE FOR 3M SERIES 1000 R.P.M. / 6 POLES

FRAME SIZE	Pn kW	VOLTAGE 380 I (A)	VOLTAGE 400 I (A)	VOLTAGE 415 I (A)	Speed RPM	Eff %	P.F. COSΦ	LRT ------ RLT	LRA ------ RLA	BDT ------ RLT	Noise LwdB(A)	W kg	J Kgm2
71 M1	**0.18**	0.74	0.70	0.68	870	56	0.66	1.9	4.0	2.0	41	14	.00060
71 M2	**0.25**	0.95	0.90	0.87	880	59	0.68	1.9	4.0	2.0	41	14.5	.00080
80 M1	**0.37**	1.3	1.23	1.19	880	62	0.70	1.9	4.7	2.0	42	15	.00160
80 M2	**0.55**	1.8	1.70	1.64	880	65	0.72	1.9	4.7	2.1	42	16	.00190
90 S	**0.75**	2.29	2.18	2.10	905	69	0.72	2.0	5.3	2.1	45	19	.00290
90 L	**1.1**	3.18	3.02	2.91	905	72	0.73	2.0	5.5	2.1	45	22	.00350
100 L	**1.5**	4	3.80	3.66	920	76	0.75	2.0	5.5	2.1	49	32	.00690
112 M	**2.2**	5.6	5.29	5.1	935	79	0.76	2.0	6.5	2.1	53	41	.01400
132 S1	**3**	7.4	7.03	6.78	960	81	0.76	2.1	6.5	2.1	57	63	.02860
132 M1	**4**	9.75	9.26	8.93	960	82	0.76	2.1	6.5	2.1	57	72	.03570
132 M2	**5.5**	12.9	12.3	11.8	960	84	0.77	2.1	6.5	2.1	57	81	.04490
160 M	**7.5**	17.2	16.3	15.8	970	86	0.77	2.0	6.5	2.1	61	118	.08100
160 L	**11**	24.5	23.3	22.4	970	87.5	0.78	2.0	6.5	2.1	61	145	.11600
180 L	**15**	31.6	30.0	28.9	970	89	0.81	2.0	7	2.1	61	178	.20700
200 L1	**18.5**	38.6	36.6	35.3	980	90	0.81	2.1	7	2.1	65	200	.31500
200 L2	**22**	44.7	42.5	41.0	980	90	0.83	2.0	7	2.1	65	228	.36000
225 M	**30**	59.3	56.3	54.3	980	91.5	0.84	2.0	7	2.1	66	265	.54700
250 M	**37**	71	67.5	65.1	980	92	0.86	2.1	7	2.1	68	370	.84300
280 S	**45**	86	81.7	78.7	980	92.5	0.86	2.1	7	2	68	490	1..390
280 M	**55**	104	99.5	95.9	980	92.8	0.86	2.1	6.7	2	69	540	1.6500
315 S	**75**	142	135	130	985	93.5	0.86	2.0	6.7	2	70	900	4.1100
315 M	**90**	169	161	155	985	93.8	0.86	2.0	6.7	2	70	980	4.7800
315 L1	**110**	207	190	189	985	94	0.86	2.0	6.7	2	71	1045	5.4500
315 L2	**132**	246	232	224	985	94.2	0.87	2.0	6.7	2	71	1100	6.1200
355 M1	**160**	292	278	268	990	94.5	0.88	1.9	6.7	2	73	1550	9.500
355 M2	**200**	365	347	335	990	94.5	0.88	1.9	6.7	2	75	1600	10.400
355 L	**250**	457	434	418	990	94.5	0.88	1.9	6.7	2	78	1700	12.400

Duty Type : (S1)
Insulation Class : F
Prtection Class : IP55
Cooling Method : IC 411

Rated Voltage : 400 V / 440 V
Rated Frequency : 50 Hz / 60 Hz
Ambient Temperature : -15 ºC ~ 40 ºC
Standard : ENIEC 60034-1

LRT/RLT : DOL Starting torque ratio
LRA/RLA : DOL Starting current ratio
BDT/RLT : DOL Starting pull out torque ratio

PERFOMANCE TABLE FOR 3M SERIES 750 R.P.M. / 8 POLES

FRAME SIZE	Pn kW	VOLTAGE 380 I (A)	VOLTAGE 400 I (A)	VOLTAGE 415 I (A)	Speed RPM	Eff %	P.F. COSΦ	LRT ------ RLT	LRA ------ RLA	BDT ------ RLT	Noise LwdB(A)	W kg	J Kgm2
80 M1	**0.18**	0.83	0.84	0.80	645	51	0.61	1.8	3.3	1.9	43	15	.00250
80 M2	**0.25**	1.1	1.1	1.06	645	54	0.61	1.8	3.3	1.9	44	16	.00300
90 S	**0.37**	1.49	1.41	1.36	675	62	0.61	1.8	4	1.9	44	20	.00510
90 L	**0.55**	2.17	2.07	1.99	680	63	0.61	1.8	4	2	46	23	.00650
100 L1	**0.75**	2.43	2.31	2.22	680	70	0.67	1.8	4	2	47	29	.00900
100 L2	**1.1**	3.36	3.20	3.08	680	72	0.69	1.8	5	2	48	31	.01100
112 M	**1.5**	4.4	4.18	4.03	690	74	0.70	1.8	5	2	49	41	.02450
132 S	**2.2**	6.0	5.66	5.46	710	79	0.71	1.8	6	2	52	61	.03140
132 M	**3**	7.8	7.41	7.15	710	80	0.73	1.8	6	2	59	74	.03950
160 M1	**4**	10.3	9.76	9.41	720	81	0.73	1.9	6	2	60	95.5	.07530
160 M2	**5.5**	13.6	12.9	12.5	720	83	0.74	1.9	6	2	67	107	.09310
160 L	**7.5**	17.8	16.9	16.3	720	85.5	0.75	1.9	6	2	68	128	.12600
180 L	**11**	25.5	24.2	23.3	730	87.5	0.75	2	6.5	2	70	169	.20300
200 L	**15**	34.1	32.4	31.2	730	88	0.76	2	6.6	2	70	236	.33900
225 S	**18.5**	41.1	39.0	37.6	730	90	0.76	1.9	6.6	2	71	274	.49100
225 M	**22**	48.9	45.0	43.4	730	90.5	0.78	1.9	6.6	2	72	290	.54700
250 M	**30**	63	60.2	58.1	735	91	0.79	1.9	6.5	2	74	370	.83400
280 S	**37**	78	73.9	71.2	735	91.5	0.79	1.9	6.6	2	74	488	1.6650
280 M	**45**	94	89.4	86.1	740	92	0.79	1.9	6.6	2	75	563	1.9300
315 S	**55**	111	106	102	735	92.8	0.81	1.8	6.6	2	76	852	4.7900
315 M	**75**	150	143	138	735	93.5	0.81	1.8	6.2	2	76	933	5.5800
315 L1	**90**	178	169	163	735	93.8	0.82	1.8	6.4	2	76	1027	6.3700
315 L2	**110**	217	206	199	735	94	0.82	1.8	6.4	2	77	1117	7.2300
355 M1	**132**	261	248	239	740	93.7	0.82	1.8	6.4	2	79	2000	7.9000
355 M2	**160**	315	299	288	740	94.2	0.82	1.8	6.4	2	80	2150	10.300
355 L	**200**	387	368	355	740	94.5	0.83	1.8	6.4	2	82	2250	12.300

\

Duty Type : (S1)
Insulation Class : F
Prtection Class : IP55
Cooling Method : IC 411

Rated Voltage : 400 V / 440 V
Rated Frequency : 50 Hz / 60 Hz
Ambient Temperature : -15 ºC ~ 40 ºC
Standard : ENIEC 60034-1

LRT/RLT : DOL Starting torque ratio
LRA/RLA : DOL Starting current ratio
BDT/RLT : DOL Starting pull out torque ratio

3M SERIES

Three Phases Low Voltage Asynchronous Motors

PERFOMANCE TABLE FOR 3M SERIES 600 R.P.M. / 10 POLES

FRAME SIZE	Pn kW	VOLTAGE 380 I (A)	VOLTAGE 400 I (A)	VOLTAGE 415 I (A)	Speed RPM	Eff %	P.F. COSΦ	LRT ------ RLT	LRA ------ RLA	BDT ------ RLT	Noise LwdB(A)	W kg	J Kgm2
315 S	**45**	100	95	91	590	91.5	0.75	1.5	6.2	2	68	818	4.7900
315 M	**55**	121	115	111	590	92	0.75	1.5	6.2	2	69	903	5.5800
315 L1	**75**	162	154	148	590	92.5	0.76	1.5	5.8	2	70	1007	6.3700
315 L2	**90**	191	181	175	590	93	0.77	1.5	5.9	2	72	1100	7.2300
355 M1	**110**	230	218	211	590	93.2	0.78	1.3	6.0	2	76	1800	7.9000
355 M2	**132**	275	261	252	590	93.5	0.78	1.3	6.0	2	78	2000	10.300
355 L	**160**	334	317	305	590	93.5	0.78	1.3	6.0	2	80	2500	12.300

Duty Type : (S1)
Insulation Class : F
Prtection Class : IP55
Cooling Method : IC 411

Rated Voltage : 400 V / 440 V
Rated Frequency : 50 Hz / 60 Hz
Ambient Temperature : -15 ºC ~ 40 ºC
Standard : ENIEC 60034-1

LRT/RLT : DOL Starting torque ratio
LRA/RLA : DOL Starting current ratio
BDT/RLT : DOL Starting pull out torque ratio

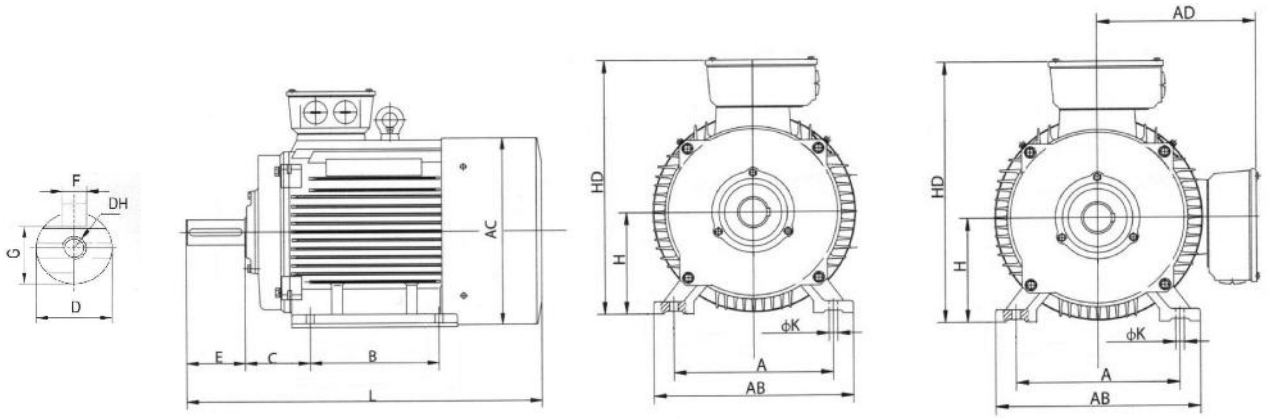

DIMENSIONS TABLE FOR MOUNTING B3 / IM 1011

FRAME SIZE	POLES				MOUNTING DIMENSIONS									OUTLINE DIMENSIONS					
					A	B	C	D	E	F	G	H	K	AB	AC	AD	HD	L	DH
63M	2	4			100	80	40	11	23	4	8.5	63	7	135	130	70	180	230	M4x12
71M	2	4	6		112	90	45	14	30	5	11	71	7	150	145	80	195	255	M5x12
80	2	4	6	8	125	100	50	19	40	6	15.5	80	10	165	175	145	220	295	M6x16
90S	2	4	6	8	140	100	56	24	50	8	20	90	10	180	195	155	250	320	M8x19
90L	2	4	6	8	140	125	56	24	50	8	20	90	10	180	195	155	250	345	M8x19
100L	2	4	6	8	160	140	63	28	60	8	24	100	12	205	215	180	270	385	M10x22
112M	2	4	6	8	190	140	70	28	60	8	24	112	12	230	240	190	300	400	M10x22
132S	2	4	6	8	246	140	89	38	80	10	33	132	12	270	275	210	345	470	M12x28
132M	2	4	6	8	246	178	89	38	80	10	33	132	12	270	275	210	345	510	M12x28
160M	2	4	6	8	254	210	108	42	110	12	37	160	15	320	330	255	420	615	M16x36
160L	2	4	6	8	254	254	108	42	110	12	37	160	15	320	330	255	420	615	M16x36
180M	2	4	6	8	279	241	121	48	110	14	42.5	180	15	355	380	280	455	700	M16x36
180L	2	4	6	8	279	279	121	48	110	14	42.5	180	15	355	380	280	455	740	M16x36
200L	2	4	6	8	318	305	133	55	110	16	49	200	19	395	420	305	505	770	M20x42
225S		4		8	356	286	149	60	140	18	53	225	19	435	470	335	560	815	M20x42
225M	2				356	311	149	55	110	16	49	225	19	435	470	335	560	820	M20x42
225M		4	6	8	356	311	149	60	140	18	53	225	19	435	470	335	560	845	M20x42
250M	2				406	349	168	60	140	18	53	250	24	490	510	370	615	910	M20x42
250M		4	6	8	406	349	168	65	140	18	58	250	24	490	510	370	615	910	M20x42
280S	2				457	368	190	65	140	18	58	280	24	550	580	410	680	985	M20x42
280S		4	6	8	457	368	190	75	140	20	67.5	280	24	550	580	410	680	985	M20x42
280M	2				457	419	190	65	140	18	58	280	24	550	580	410	680	1035	M20x42
280M		4	6	8	457	419	190	75	140	20	67.5	280	24	550	580	410	680	1035	M20x42
315S	2				508	406	216	65	140	18	58	315	28	635	645	530	845	1160	M20x42
315S		4	6	8	508	406	216	80	170	22	71	315	28	635	645	530	845	1270	M20x42
315M	2				508	457	216	65	140	18	58	315	28	635	645	530	845	1190	M20x42
315M		4	6	8	508	457	216	80	170	22	71	315	28	635	645	530	845	1300	M20x42
315L	2				508	508	216	65	140	18	58	315	28	635	645	530	845	1190	M20x42
315L		4	6	8	508	508	216	80	170	22	71	315	28	635	645	530	845	1300	M20x42
355M	2				610	560	254	75	140	20	67.5	355	28	730	710	655	1010	1500	M20x42
355M		4	6	8	610	560	254	95	170	25	86	355	28	730	710	655	1010	1530	M20x42
355L	2				610	630	254	75	140	20	67.5	355	28	730	710	655	1010	1500	M20x42
355L		4	6	8	610	630	254	95	170	25	86	355	28	730	710	655	1010	1530	M20x42

All values are for reference use only

3M SERIES

Three Phases Low Voltage Asynchronous Motors

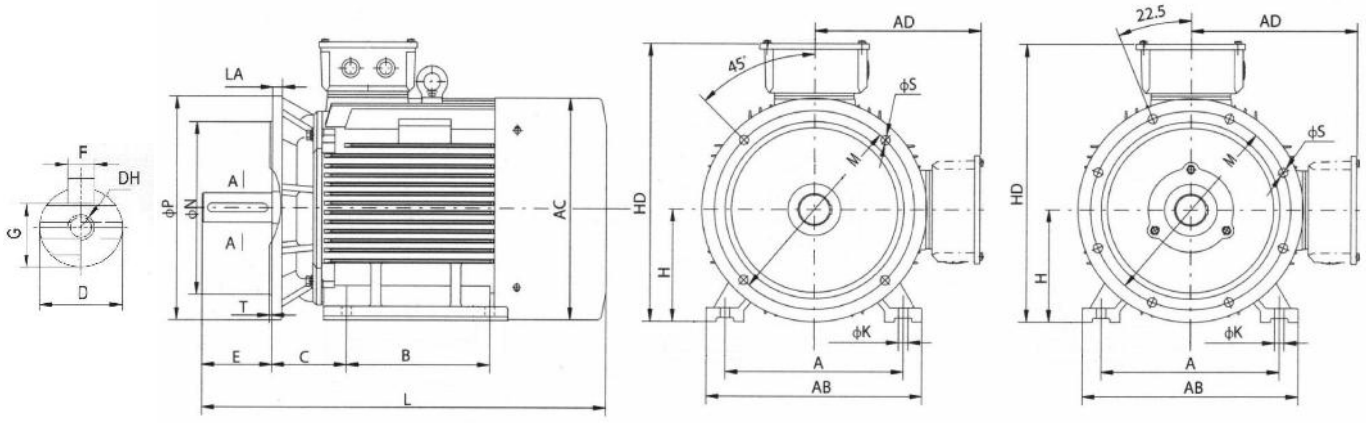

DIMENSIONS TABLE FOR MOUNTING B35 / IM

FRAME SIZE	POLES				MOUNTING DIMENSIONS														OUTLINE DIMENSIONS					
					A	B	C	D	E	F	G	H	K	M	N	P	S	T	AB	AC	AD	HD	L	DH
63M	2	4			100	80	40	11	23	4	8.5	63	7	115	95	140	4Φ-10	3	135	130	70	180	230	M4x12
71M	2	4	6		112	90	45	14	30	5	11	71	7	130	110	160	4Φ-10	3,5	150	145	80	195	255	M5x12
80	2	4	6	8	125	100	50	19	40	6	15..5	80	10	165	130	200	4Φ-12	3,5	165	175	145	220	295	M6x16
90S	2	4	6	8	140	100	56	24	50	8	20	90	10	165	130	200	4Φ-12	3,5	180	195	155	250	320	M8x19
90L	2	4	6	8	140	125	56	24	50	8	20	90	10	165	130	200	4Φ-12	3,5	180	195	155	250	345	M8x19
100L	2	4	6	8	160	140	63	28	60	8	24	100	12	215	180	250	4Φ-15	4	205	215	180	270	385	M10x22
112M	2	4	6	8	190	140	70	28	60	8	24	112	12	215	180	250	4Φ-15	4	230	240	190	300	400	M10x22
132S	2	4	6	8	246	140	89	38	80	10	33	132	12	265	230	300	4Φ-15	4	270	275	210	345	470	M12x28
132M	2	4	6	8	246	178	89	38	80	10	33	132	12	265	230	300	4Φ-15	4	270	275	210	345	510	M12x28
160M	2	4	6	8	254	210	108	42	110	12	37	160	15	300	250	350	4Φ-19	5	320	330	255	420	615	M16x36
160L	2	4	6	8	254	254	108	42	110	12	37	160	15	300	250	350	4Φ-19	5	320	330	255	420	615	M16x36
180M	2	4	6	8	279	241	121	48	110	14	42.5	180	15	300	250	350	4Φ-19	5	355	380	280	455	700	M16x36
180L	2	4	6	8	279	279	121	48	110	14	42.5	180	15	300	250	350	4Φ-19	5	355	380	280	455	740	M16x36
200L	2	4	6	8	318	305	133	55	110	16	49	200	19	350	300	400	4Φ-19	5	395	420	305	505	770	M20x42
225S		4		8	356	286	149	60	140	18	53	225	19	400	350	450	8Φ-19	5	435	470	335	560	815	M20x42
225M	2				356	311	149	55	110	16	49	225	19	400	350	450	8Φ-19	5	435	470	335	560	820	M20x42
225M		4	6	8	356	311	149	60	140	18	53	225	19	400	350	450	8Φ-19	5	435	470	335	560	845	M20x42
250M	2				406	349	168	60	140	18	53	250	24	500	450	550	8Φ-19	5	490	510	370	615	910	M20x42
250M		4	6	8	406	349	168	65	140	18	58	250	24	500	450	550	8Φ-19	5	490	510	370	615	910	M20x42
280S	2				457	368	190	65	140	18	58	280	24	500	450	550	8Φ-19	5	550	580	410	680	985	M20x42
280S		4	6	8	457	368	190	75	140	20	67.5	280	24	500	450	550	8Φ-19	5	550	580	410	680	985	M20x42
280M	2				457	419	190	65	140	18	58	280	24	500	450	550	8Φ-19	5	550	580	410	680	1035	M20x42
280M		4	6	8	457	419	190	75	140	20	67.5	280	24	500	450	550	8Φ-19	5	550	580	410	680	1035	M20x42
315S	2				508	406	216	65	140	18	58	315	28	600	550	660	8Φ-24	6	635	645	530	845	1160	M20x42
315S		4	6	8	508	406	216	80	170	22	71	315	28	600	550	660	8Φ-24	6	635	645	530	845	1270	M20x42
315M	2				508	457	216	65	140	18	58	315	28	600	550	660	8Φ-24	6	635	645	530	845	1190	M20x42
315M		4	6	8	508	457	216	80	170	22	71	315	28	600	550	660	8Φ-24	6	635	645	530	845	1300	M20x42
315L	2				508	508	216	65	140	18	58	315	28	600	550	660	8Φ-24	6	635	645	530	845	1190	M20x42
315L		4	6	8	508	508	216	80	170	22	71	315	28	600	550	660	8Φ-24	6	635	645	530	845	1300	M20x42
355M	2				610	560	254	75	140	20	67.5	355	28	740	680	800	8Φ-24	6	730	710	655	1010	1500	M20x42
355M		4	6	8	610	560	254	95	170	25	86	355	28	740	680	800	8Φ-24	6	730	710	655	1010	1530	M20x42
355L	2				610	630	254	75	140	20	67.5	355	28	740	680	800	8Φ-24	6	730	710	655	1010	1500	M20x42
355L		4	6	8	610	630	254	95	170	25	86	355	28	740	680	800	8Φ-24	6	730	710	655	1010	1530	M20x42

All values are for reference use only

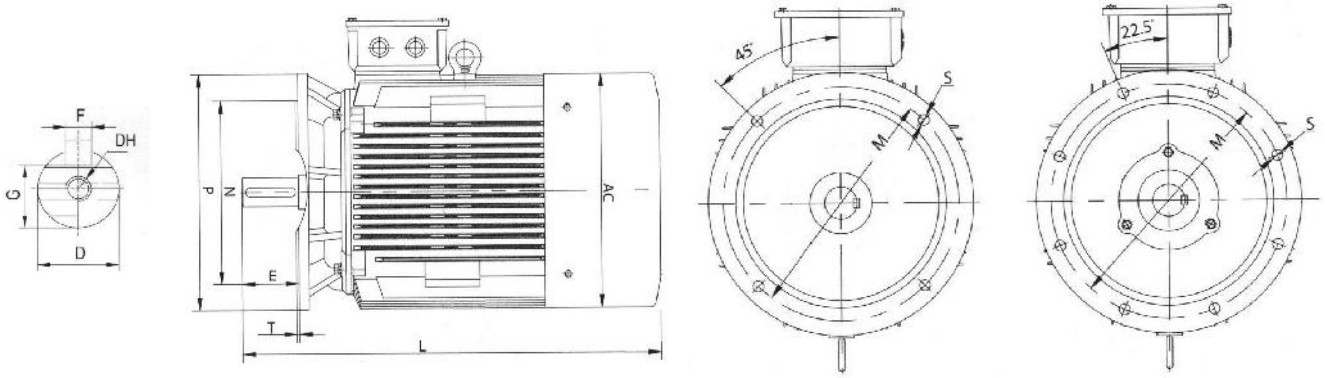

DIMENSIONS TABLE FOR MOUNTING B5 / IM

FRAME SIZE	POLES				MOUNTING DIMENSIONS									OUTLINE DIMENSIONS			
					D	E	F	G	M	N	P	S	T	AC	AD	L	DH
80	2	4	6	8	19	40	6	15.5	165	130	200	4Φ-12	3,5	175	145	295	M6x16
90S	2	4	6	8	24	50	8	20	165	130	200	4Φ-12	3,5	195	155	320	M8x19
90L	2	4	6	8	24	50	8	20	165	130	200	4Φ-12	3,5	195	155	345	M8x19
100L	2	4	6	8	28	60	8	24	215	180	250	4Φ-15	4	215	180	385	M10x22
112M	2	4	6	8	28	60	8	24	215	180	250	4Φ-15	4	240	190	400	M10x22
132S	2	4	6	8	38	80	10	33	265	230	300	4Φ-15	4	275	210	470	M12x28
132M	2	4	6	8	38	80	10	33	265	230	300	4Φ-15	4	275	210	510	M12x28
160M	2	4	6	8	42	110	12	37	300	250	350	4Φ-19	5	330	255	615	M16x36
160L	2	4	6	8	42	110	12	37	300	250	350	4Φ-19	5	330	255	670	M16x36
180M	2	4	6	8	48	110	14	42.5	300	250	350	4Φ-19	5	380	280	700	M16x36
180L	2	4	6	8	48	110	14	42.5	300	250	350	4Φ-19	5	380	280	740	M16x36
200L	2	4	6	8	55	110	16	49	350	300	400	4Φ-19	5	420	305	770	M20x42
225S		4		8	60	140	18	53	400	350	450	8Φ-19	5	470	335	815	M20x42
225M	2				55	110	16	49	400	350	450	8Φ-19	5	470	335	820	M20x42
225M		4	6	8	60	140	18	53	400	350	450	8Φ-19	5	470	335	845	M20x42
250M	2				60	140	18	53	500	450	550	8Φ-19	5	510	370	910	M20x42
250M		4	6	8	65	140	18	58	500	450	550	8Φ-19	5	510	370	910	M20x42
280S	2				65	140	18	58	500	450	550	8Φ-19	5	580	410	985	M20x42
280S		4	6	8	75	140	20	67.5	500	450	550	8Φ-19	5	580	410	985	M20x42
280M	2				65	140	18	58	500	450	550	8Φ-19	5	580	410	1035	M20x42
280M		4	6	8	75	140	20	67.5	500	450	550	8Φ-19	5	580	410	1035	M20x42

All values are for reference use only

3M SERIES

Three Phases Low Voltage Asynchronous Motors

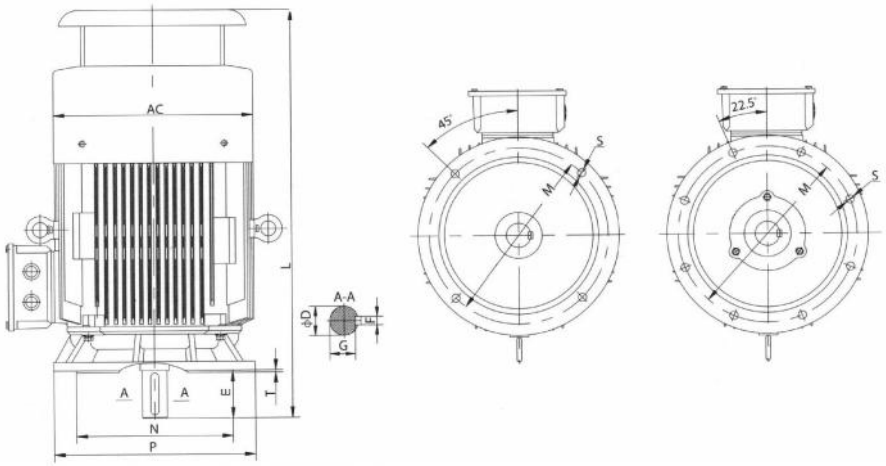

DIMENSIONS TABLE FOR MOUNTING V1 / IM 3011

FRAME SIZE	POLES				MOUNTING DIMENSIONS									OUTLINE DIMENSIONS		
					D	E	F	G	M	N	P	S	T	AC	AD	L
80	2	4	6	8	19	40	6	15.5	165	130	200	4Φ-12	3,5	175	145	295
90S	2	4	6	8	24	50	8	20	165	130	200	4Φ-12	3,5	195	155	320
90L	2	4	6	8	24	50	8	20	165	130	200	4Φ-12	3,5	195	155	345
100L	2	4	6	8	28	60	8	24	215	180	250	4Φ-15	4	215	180	385
112M	2	4	6	8	28	60	8	24	215	180	250	4Φ-15	4	240	190	400
132S	2	4	6	8	38	80	10	33	265	230	300	4Φ-15	4	275	210	470
132M	2	4	6	8	38	80	10	33	265	230	300	4Φ-15	4	275	210	510
160M	2	4	6	8	42	110	12	37	300	250	350	4Φ-19	5	330	255	615
160L	2	4	6	8	42	110	12	37	300	250	350	4Φ-19	5	330	255	615
180M	2	4	6	8	48	110	14	42.5	300	250	350	4Φ-19	5	380	280	760
180L	2	4	6	8	48	110	14	42.5	300	250	350	4Φ-19	5	380	280	800
200L	2	4	6	8	55	110	16	49	350	300	400	4Φ-19	5	420	305	840
225S		4		8	60	140	18	53	400	350	450	8Φ-19	5	470	335	905
225M	2				55	110	16	49	400	350	450	8Φ-19	5	470	335	910
225M		4	6	8	60	140	18	53	400	350	450	8Φ-19	5	470	335	935
250M	2				60	140	18	53	500	450	550	8Φ-19	5	510	370	1015
250M		4	6	8	65	140	18	58	500	450	550	8Φ-19	5	510	370	1015
280S	2				65	140	18	58	500	450	550	8Φ-19	5	580	410	1110
280S		4	6	8	75	140	20	67.5	500	450	550	8Φ-19	5	580	410	1110
280M	2				65	140	18	58	500	450	550	8Φ-19	5	580	410	1150
280M		4	6	8	75	140	20	67.5	500	450	550	8Φ-19	5	580	410	1150
315S	2				65	140	18	58	600	550	660	8Φ-24	6	645	530	1280
315S		4	6	8	80	170	22	71	600	550	660	8Φ-24	6	645	530	1510
315M	2				65	140	18	58	600	550	660	8Φ-24	6	645	530	1310
315M		4	6	8	80	170	22	71	600	550	660	8Φ-24	6	645	530	1430
315L	2				65	140	18	58	600	550	660	8Φ-24	6	645	530	1310
315L		4	6	8	80	170	22	71	600	550	660	8Φ-24	6	645	530	1430
355M	2				75	140	20	67.5	740	680	800	8Φ-24	6	710	655	1640
355M		4	6	8	95	170	25	86	740	680	800	8Φ-24	6	710	655	1670
355L	2				75	140	20	67.5	740	680	800	8Φ-24	6	710	655	1640
355L		4	6	8	95 100	170 210	25 28	86 90	740	680	800	8Φ-24	6	710	655	1670

Il values are for reference use only

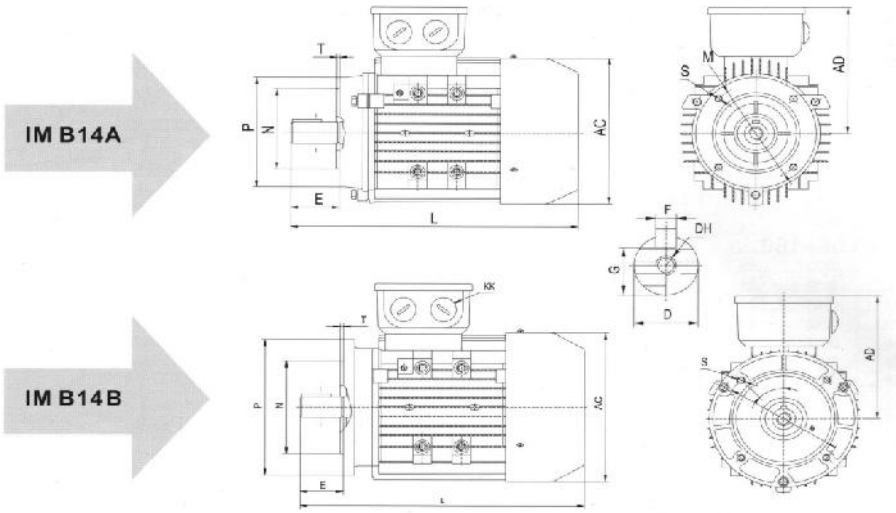

DIMENSIONS TABLE FOR MOUNTING B14 B / IM 3601

FRAME SIZE	POLES				MOUNTING DIMENSIONS									OUTLINE DIMENSIONS			
					D	E	F	G	M	N	P	S	T	AC	AD	DH	L
56	2	4	6	8	9	20	3	7.2	85	70	105	M6	2.5	110	100	M4x12	199
63	2	4	6	8	11	23	4	8.5	100	80	120	M6	2.5	130	111	M4x12	217
71	2	4	6	8	14	30	5	11	115	95	140	M8	2.5	145	118	M5x12	245
80	2	4	6	8	19	40	6	15.5	130	110	160	M8	3	175	134	M6x16	297
90S	2	4	6	8	24	50	8	20	130	110	160	M8	3	195	140	M8x19	315
90L	2	4	6	8	24	50	8	20	130	110	160	M8	3	195	140	M8x19	340
100L	2	4	6	8	28	60	8	24	165	130	200	M10	3.5	215	160	M10x22	385
112M	2	4	6	8	28	60	8	24	165	130	200	M10	3.5	240	178	M10x22	400
132S	2	4	6	8	38	80	10	33	215	180	250	M12	3.5	275	206	M12x28	483
132M	2	4	6	8	38	80	10	33	215	180	250	M12	3.5	275	206	M12x28	510
160M	2	4	6	8	42	110	12	37	265	230	300	M16	4	330	255	M16x36	615
160L	2	4	6	8	42	110	12	37	265	230	300	M16	4	330	255	M16x36	670

DIMENSIONS TABLE FOR MOUNTING B14 A / IM 3601

FRAME SIZE	POLES				MOUNTING DIMENSIONS									OUTLINE DIMENSIONS			
					D	E	F	G	M	N	P	S	T	AC	AD	DH	L
56	2	4	6	8	9	20	3	7.2	65	50	80	M5	2..5	110	100	M4x12	199
63	2	4	6	8	11	23	4	8.5	75	60	90	M5	2..5	130	111	M4x12	217
71	2	4	6	8	14	30	5	11	85	70	105	M6	2..5	145	118	M5x12	245
80	2	4	6	8	19	40	6	15.5	100	80	120	M6	3	175	134	M6x16	297
90S	2	4	6	8	24	50	8	20	115	95	140	M8	3	195	140	M8x19	315
90L	2	4	6	8	24	50	8	20	115	95	140	M8	3	195	140	M8x19	340
100L	2	4	6	8	28	60	8	24	130	110	160	M8	3.5	215	160	M10x22	385
112M	2	4	6	8	28	60	8	24	130	110	160	M8	3.5	240	178	M10x22	400
132S	2	4	6	8	38	80	10	33	165	130	200	M10	3.5	275	206	M12x28	483
132M	2	4	6	8	38	80	10	33	165	130	200	M10	3.5	275	206	M12x28	510
160M	2	4	6	8	42	110	12	37	215	180	250	M12	4	330	255	M16x36	615
160L	2	4	6	8	42	110	12	37	255	180	250	M12	4	330	255	M16x36	670

NOTES

VILMA MOTORS
www.vilmamotors.com

GREECE
POSTAL ADRESS:MICHALAKOPOULOU 45, ATHENS, PC:11528
TEL: +30204814351, FAX:2104814311
EMAIL: info@vilmamotors.com

3M SERIES

Three Phase Squirrel Cage Induction Motors

IEC Low Voltage Asynchronous

VILMA MOTORS